3G-RC4

4 LIGHT RECESSED
MADISON

Solid aluminum double gimbal with dual axis adjustability
Standard 95+ CRI LED system with performance up to 127 LPW
Delivered lumen range per fixture head up to 3820lm at 95+ CRI
Regressed LED source for enhanced glare control
10° to 90° beam angle options suitable for various applications
New construction housing with IC housing option available
Companion to 3G's Madison product family

PROJECT:		**TYPE:**			
CATALOG#:		**DATE:**		**QTY:**	

CAT. NO	LUMEN OUTPUT (PER FIXTURE HEAD)**	CRI	COLOR TEMP	BEAM ANGLE
3G-RC4	**10** - 1000 LUMENS (4000 TOTAL) **15** - 1500 LUMENS (6000 TOTAL) **20** - 2000 LUMENS (8000 TOTAL) **25** - 2500 LUMENS (10,000 TOTAL) **30** - 3000 LUMENS (12,000 TOTAL) **35** - 3500 LUMENS (14,000 TOTAL) All lumen outputs are **delivered lumens** at 95+ CRI	**H95** - 95+ CRI	**27K** - 2700K **30K** - 3000K **35K** - 3500K **40K** - 4000K	**10D** - 10° [1] **20D** - 20° **40D** - 40° **60D** - 60° **90D** - 90° * *90D optic supplied with lens Not available with other lens options

VOLTAGE	DRIVER	TRIM FLANGE	GIMBAL FINISH
UNV - 120/277V **120** - 120V **347** - 347V [2]	**DIM** - 0-10V (100-1%) **LE** - PHASE DIM [3] (TRIAC/ELV, 100-1%) **D01** - 0-10V (100-0.1%) **DALI** - DALI (100-1%) [4] **DMX** - DMX (100-0%) **DHL2** - LUTRON HI-LUME LDE1 (1% ECOSYSTEM)	**WT** - WHITE TRIM **BT** - BLACK TRIM **ST** - SILVER TRIM **XTR** - TRIMLESS (MUD-IN DRYWALL)	**NG** - NATURAL ALUMINUM **BG** - BLACK GIMBAL **WG** - WHITE GIMBAL

HOUSING FINISH	HOUSING TYPE	OPTIONS
BK - BLACK (STANDARD) **WH** - WHITE **CF** - CUSTOM	**NC** - NEW CONSTRUCTION (NON-IC) **IC** - IC HOUSING [5]	**2C** - 2 CIRCUIT **BH** - C-CHANNEL BAR HANGERS **CP** - CHICAGO PLENUM [6] **EMR** - REMOTE EMERGENCY BATTERY [7] **SF** - SOFTENING LENS **SB** - SANDBLASTED LENS **LS** - LINEAR SPREAD LENS **HXB** - BLACK HEXCELL LOUVER **STN** - NATURAL SNOOT **STB** - BLACK SNOOT **STW** - WHITE SNOOT *Lens option not available with 90D optic Maximum 3 optical accessories per fixture head

1 10D reflector available up to 2000lm
2 347 available in "DIM" 0-10V only (100-1%)
3 Phase dimming options available in 120V only
4 DALI-2 (Type 6) provided as standard
5 IC housing available up to 2000lm
6 Chicago Plenum option available with New Construction Housing
7 Supplied with enclosure with Emergency Battery and driver. Installed remotely by others. Not accessible through fixture aperture

** 3G has upgraded our LED system and overall performance at no additional cost. We now offer 95+CRI as standard. All lumen outputs are delivered lumens. This upgraded LED system is more efficient than our previous 80CRI, 90CRI, and 97CRI options. Please see the last page of this spec sheet to cross-reference old lumen outputs with our new, 95+CRI lumen output options

PERFORMANCE (PER FIXTURE HEAD)

LUMEN OUTPUT	DELIVERED LUMENS	SYSTEM WATTS	EFFICACY (LPW)
1000	1000	8.7	116
1500	1500	13.1	116
2000	2000	18.6	108
2500	2500	23.2	108
3000	3000	29.5	102
3500	3500	34.7	101

BASED ON 95+ CRI, 3500K, 40D OPTIC
Lumen output and actual wattage may vary +/- 5%

MULTIPLIERS

BEAM ANGLE	
10D	0.92
20D	1.07
40D	1.00
60D	1.00
90D	0.90

COLOR TEMP	
2700K	0.98
3000K	1.00
3500K	1.00
4000K	1.02

HOUSING
New construction housing
Housing fabricated in cold rolled steel. Standard black powder coated finish
Maximum ceiling thickness of 1". Consult factory for modifications
All housing options designed to be easily converted in field to trim or trimless with minimal components
Housing rated for #12 AWG (4 in, 4 out), 90°C conductors and through branch wiring

TRIM FLANGE
Features a 3/4" removable trim assembly designed to conceal inner hardware

TRIMLESS
Aluminum mudding flange features a unique reveal that emulates drywall
Integral aluminum blocking support provided to ensure fixture is properly secured within ceiling structure

ADJUSTABILITY
Solid aluminum double gimbal with dual axis adjustability
Each double gimbal can be locked in place

OPTICS
Proprietary anodized, aluminum reflectors
Beam angle available in 10°, 20°, 40° and 60°, and 90°
Reflectors are field replaceable (10° reflector not interchangeable)

LED SYSTEM
Standard 95+ CRI
Color consistency <2 SDCM
Available in 27K, 30K, 35K, and 40K
L90 > 50,000 hours

ELECTRICAL
Standard 0-10V, constant current drivers
100-1% dimming range and >0.9 power factor
Standard 120/277V universal voltage with several driver options
120V Forward Phase/Reverse Phase driver option (100-1%)
Integral drivers are easily accessible through luminaire aperture

EMERGENCY
7W output for 90 minutes (One fixture head +/- 850lm at 95+ CRI)
Title 24 Certified
Remote emergency battery not accessible through fixture aperture
Maximum remote mounting distance:
3000lm or below - 50ft (12AWG) or 25ft (14AWG)
Above 3000lm - 30ft (12AWG) or 20ft (14AWG)
Caution: Emergency Battery utilizes more than one power source and servicing should be performed by qualified personnel

MOUNTING
Trim fixture designed for use in drywall, wood, acoustic, and other architectural ceilings
Trimless fixture designed for use in drywall, mud-in ceiling applications
Optional C-Channel bar hangers available
Butterfly brackets compatible with 1/2" x 1/2" channel, 1/2", 5/8", 3/4" bar hanger, 1/2" EMT, and furring strips (supplied by others)

LISTING
ETL listed and conforms to UL1598 standard
Certified to CSA22.2 NO.250.0.
Rated for dry or damp locations

WARRANTY
5 year limited warranty
LED system rated for operation in ambient environments up to 25°C

TRIM HOUSING OPTIONS

NC - NEW CONSTRUCTION (NON-IC)
IC - IC HOUSING (2500LM MAX)
CP - CHICAGO PLENUM HOUSING

LUMEN OUTPUT	A	B	C
Up to 2500lm	45°	45°	45°
3000lm	25°	45°	45°
4000lm	15°	45°	30°

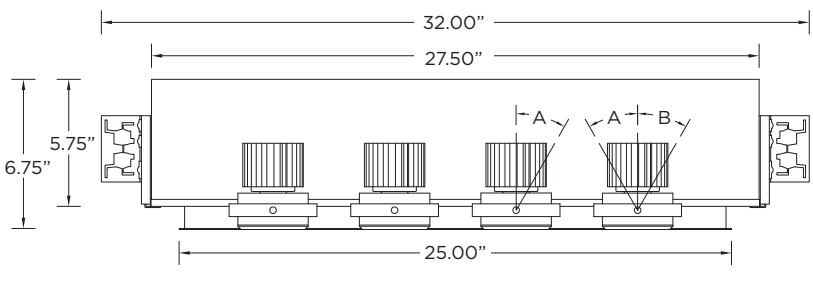

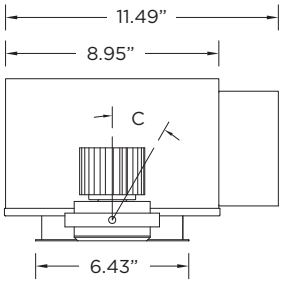

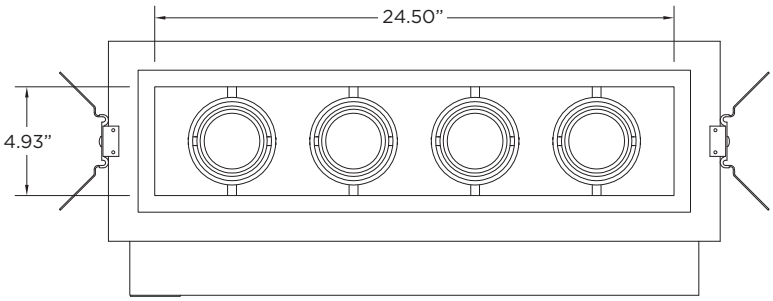

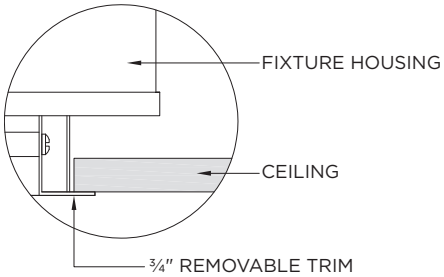

TRIMLESS HOUSING OPTIONS

NC - NEW CONSTRUCTION (NON-IC)
IC - IC HOUSING (2500LM MAX)
CP - CHICAGO PLENUM HOUSING

LUMEN OUTPUT	A	B	C
Up to 2500lm	45°	45°	45°
3000lm	25°	45°	45°
4000lm	15°	45°	30°

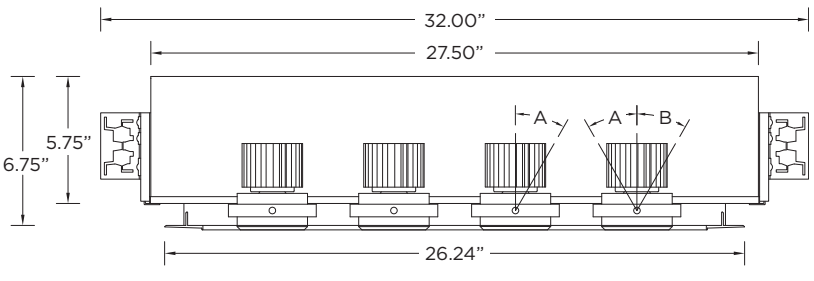

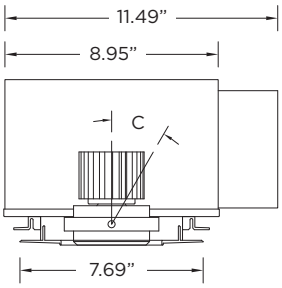

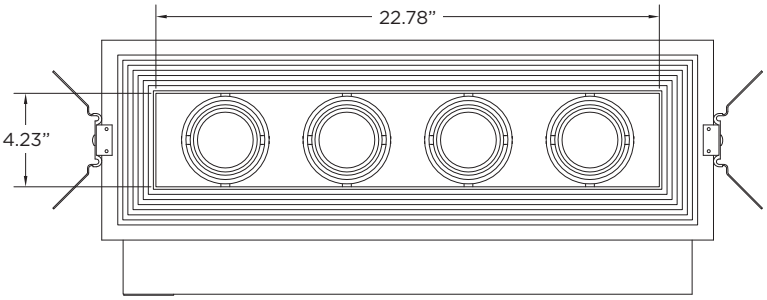

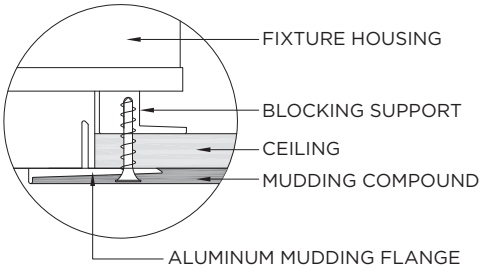

LUMEN OUTPUT REFERENCE CHART

3G has upgraded our LED system and overall performance at no additional cost. We now offer 95+CRI as standard. All lumen outputs are delivered lumens. This new LED system is more efficient than our previous 80CRI, 90CRI, and 97CRI options. Please use these charts to cross-reference old lumen outputs with our new, 95+CRI lumen output options

80CRI REFERENCE CHARTS

MATCH THE GRADIENT SHADE FROM THE OLD LUMEN OUTPUT CHART TO THE NEW LUMEN OUTPUT OPTION

OLD 80CRI SPECS			
LUMEN OUTPUT	DELIVERED LUMENS	SYSTEM WATTS	EFFICACY (LPW)
1000	1080	10.3	105
1500	1444	14.0	103
2200	2089	22.0	95
3000	2815	31.1	90
4000	3958	43.0	92

NEW 95+CRI SPECS			
LUMEN OUTPUT	DELIVERED LUMENS	SYSTEM WATTS	EFFICACY (LPW)
1000	1000	8.1	123
1500	1500	12.3	122
2000	2000	16.2	123
2500	2500	20.5	122
3000	3000	25.8	116
4000	4000	34.2	117

90CRI REFERENCE CHARTS

MATCH THE GRADIENT SHADE FROM THE OLD LUMEN OUTPUT CHART TO THE NEW LUMEN OUTPUT OPTION

OLD 90CRI SPECS			
LUMEN OUTPUT	DELIVERED LUMENS	SYSTEM WATTS	EFFICACY (LPW)
1000	951	10.3	92
1500	1271	14.0	91
2200	1838	22.0	84
3000	2477	31.1	79
4000	3483	43.0	81

NEW 95+CRI SPECS			
LUMEN OUTPUT	DELIVERED LUMENS	SYSTEM WATTS	EFFICACY (LPW)
1000	1000	8.1	123
1500	1500	12.3	122
2000	2000	16.2	123
2500	2500	20.5	122
3000	3000	25.8	116
4000	4000	34.2	117