3G-RC1, 3G-RC2, 3G-RC3, 3G-RC4, 3G-RC4SQ
3G-RC1M5, 3G-RC2M5, 3G-RC3M5

1 LIGHT, 2 LIGHT, 3 LIGHT, 4 LIGHT RECESSED MADISON TRIM

ⓘ THE IMAGES SHOWN ARE FOR ILLUSTRATION PURPOSES ONLY AND MAY NOT BE AN EXACT REPRESENTATION OF THE PRODUCT

INCLUDED COMPONENTS

NC/IC - NEW CONSTRUCTION HOUSING (FOR NEW CONSTRUCTION ONLY)

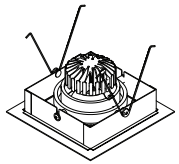

LED INSERT (RC1 SHOWN)

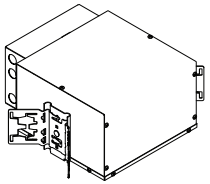

NEW CONSTRUCTION HOUSING (RC1 SHOWN)

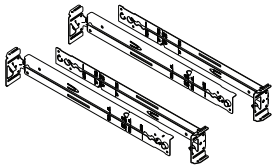

BAR HANGERS (OPTIONAL)

INSTRUCTION KEY	INFORMATION
⚠ ADDITIONAL	INSTALLATION SHOULD ONLY BE PERFORMED BY A CERTIFIED ELECTRICIAN
ⓘ ATTENTION	REFER TO LOCAL/NATIONAL CODES FOR PROPER INSTALLATION
POWER ON	FAILURE TO FOLLOW INSTALLATION INSTRUCTION MAY VOID THE WARRANTY
POWER OFF	DO NOT TOUCH LEDS. LEDS MUST BE PROTECTED FROM MECHANICAL STRESS OR DEBRIS
	TURN OFF POWER DURING INSTALLATION OR SERVICING

3G-RC1, 3G-RC2, 3G-RC3, 3G-RC4, 3G-RC4SQ
3G-RC1M5, 3G-RC2M5, 3G-RC3M5
1 LIGHT, 2 LIGHT, 3 LIGHT, 4 LIGHT RECESSED MADISON TRIM

INSTALLATION INSTRUCTIONS

1 BAR HANGER INSTALLATION
(IF SUPPLIED BY 3G)

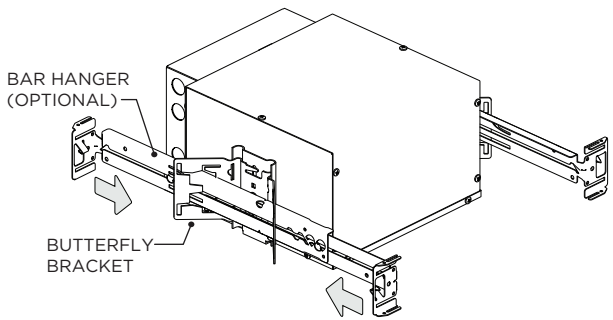

1A

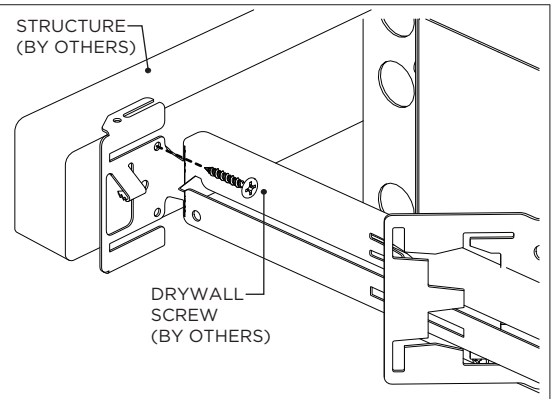

2 OTHER BAR HANGER INSTALLATION
(NOT PROVIDED BY 3G)

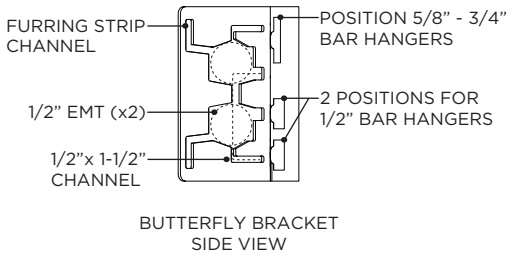

BUTTERFLY BRACKET
SIDE VIEW

3

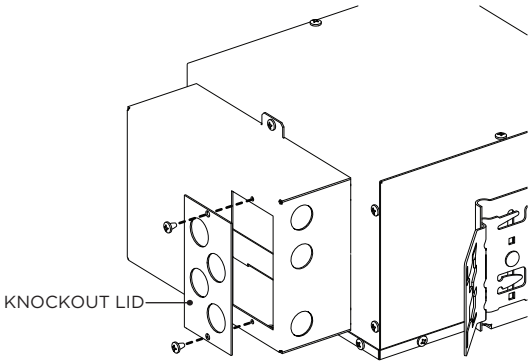

REMOVE ELECTRICAL BOX KNOCKOUT LID TO ACCESS WIRING

3A

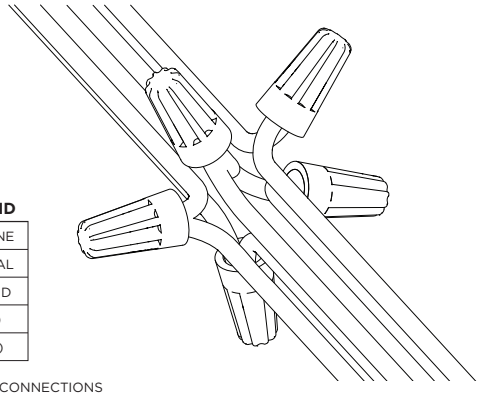

WIRING LEGEND

BLACK	HOT/LINE
WHITE	NEUTRAL
GREEN	GROUND
ORANGE	(DIM-)
PURPLE	(DIM+)

MAKE WIRING CONNECTIONS

4 CEILING CUTOUT DIMENSIONS

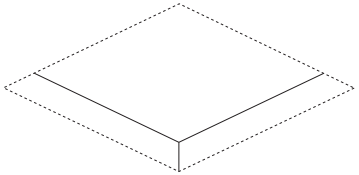

FIXTURE TYPE	CEILING HOLE SIZE
RC1	6.05" x 6.05"
RC2	13.60" x 6.05"
RC3	19.10" x 6.05"
RC4	24.60" x 6.05"
RC4SQ	10.84" x 10.84"

FIXTURE TYPE	CEILING HOLE SIZE
RC1M5	5.05" x 5.05"
RC2M5	11.63" x 5.05"
RC3M5	16.38" x 5.05"

INSTALL CEILING BELOW FIXTURE

5

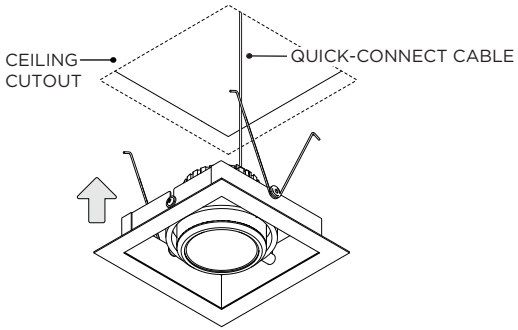

INSERT LED ASSEMBLY INTO CEILING

5A

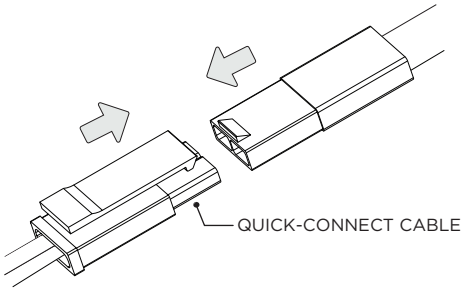

CONNECT QUICK-CONNECT CABLE TO LED ASSEMBLY

5B

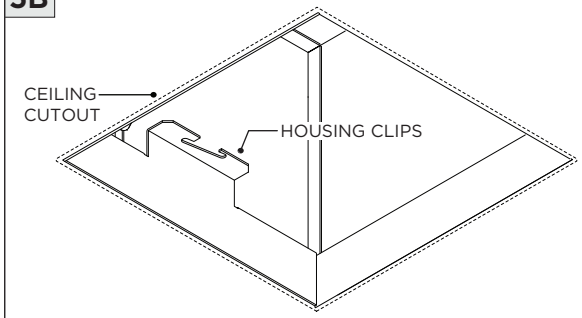

ENGAGE SPRINGS TO HOUSING CLIPS TO SECURE LED INSERT INTO CEILING

3G-RC1, 3G-RC2, 3G-RC3, 3G-RC4, 3G-RC4SQ
3G-RC1M5, 3G-RC2M5, 3G-RC3M5
1 LIGHT, 2 LIGHT, 3 LIGHT, 4 LIGHT RECESSED MADISON TRIM

DRIVER SERVICING - RC1

1 **NC/IC -** NEW CONSTRUCTION HOUSING

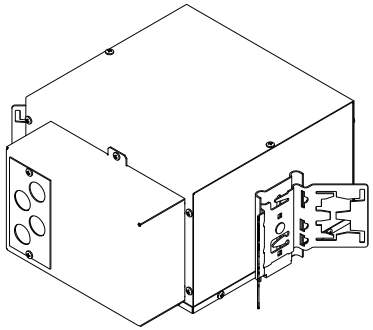

DISCONNECT POWER BEFORE SERVICING

2

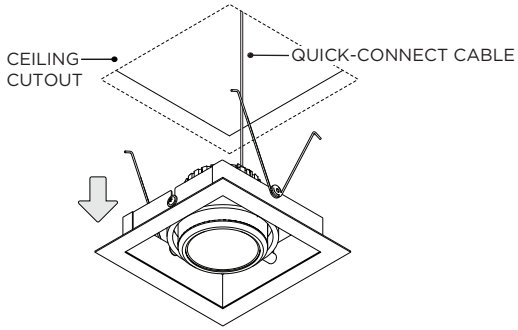

REMOVE LED ASSEMBLY FROM CEILING

2A

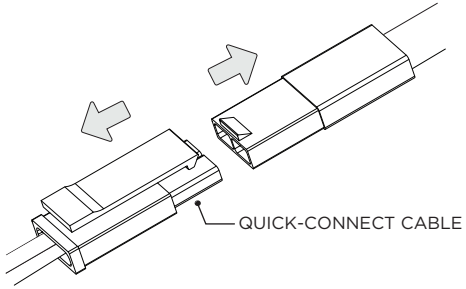

DISCONNECT QUICK-CONNECT CABLE FROM LED ASSEMBLY

3

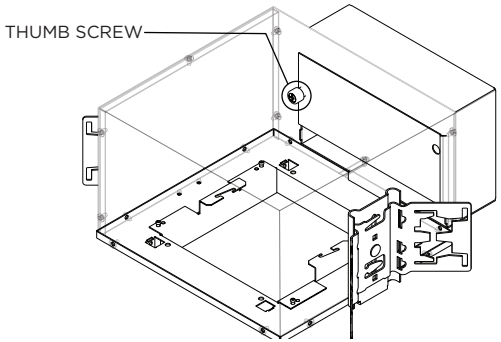

4

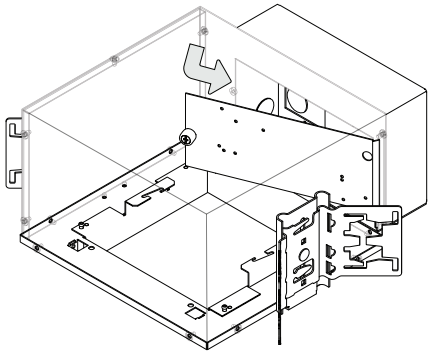

5

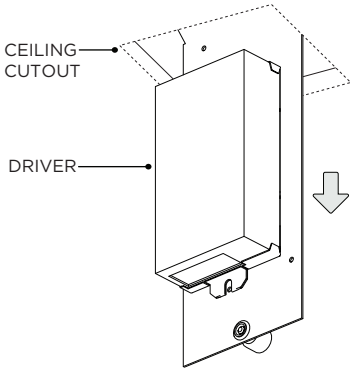

5A

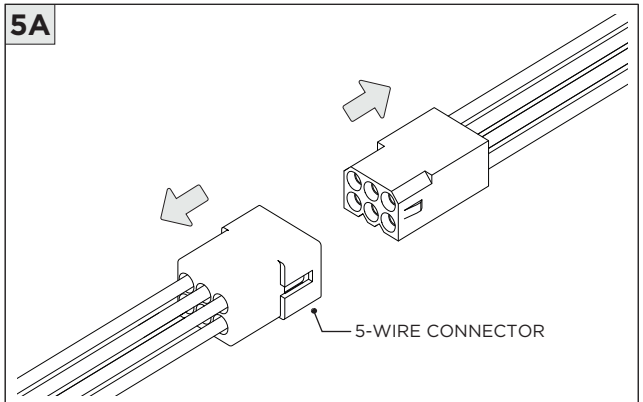

DISCONNECT 5-WIRE CONNECTOR

3G-RC1, 3G-RC2, 3G-RC3, 3G-RC4, 3G-RC4SQ
3G-RC1M5, 3G-RC2M5, 3G-RC3M5
1 LIGHT, 2 LIGHT, 3 LIGHT, 4 LIGHT RECESSED MADISON TRIM

DRIVER SERVICING - RC1, RC2, RC3, RC4, RC4SQ

1 **NC/IC -** NEW CONSTRUCTION HOUSING

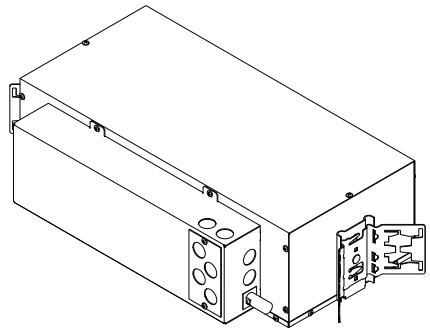

DISCONNECT POWER BEFORE SERVICING

2

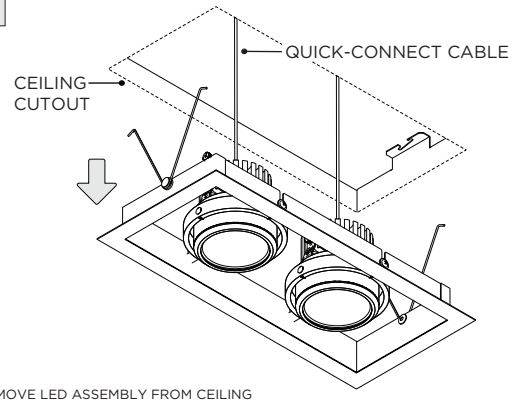

REMOVE LED ASSEMBLY FROM CEILING

2A

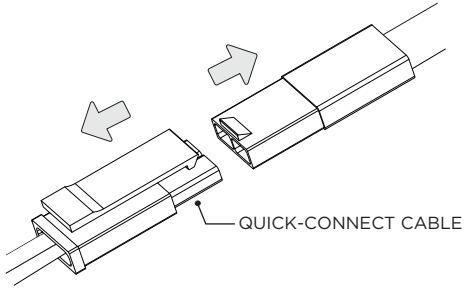

DISCONNECT QUICK-CONNECT CABLE FROM LED ASSEMBLY

3

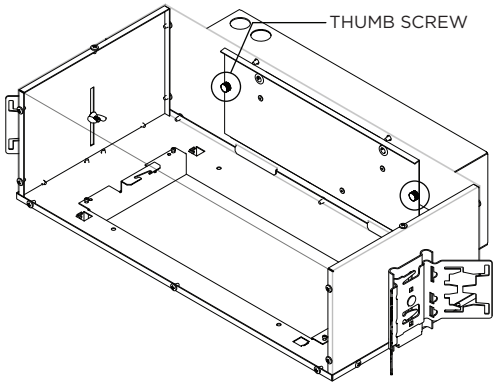

4

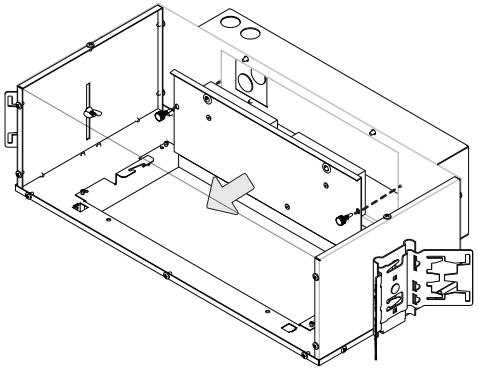

5

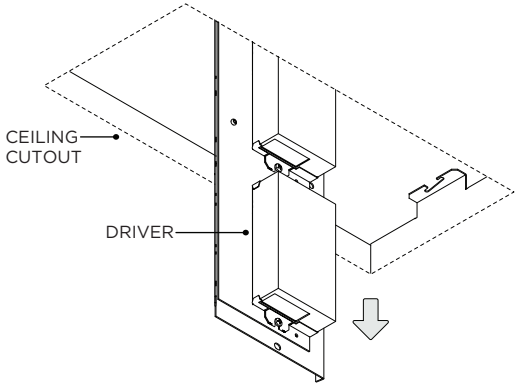

5A

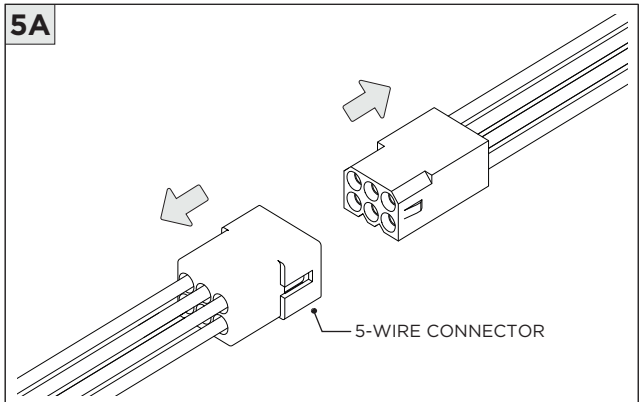

DISCONNECT 5-WIRE CONNECTORS

3G-RC1, 3G-RC2, 3G-RC3, 3G-RC4, 3G-RC4SQ
3G-RC1M5, 3G-RC2M5, 3G-RC3M5
1 LIGHT, 2 LIGHT, 3 LIGHT, 4 LIGHT RECESSED MADISON TRIM

LED SERVICING

1

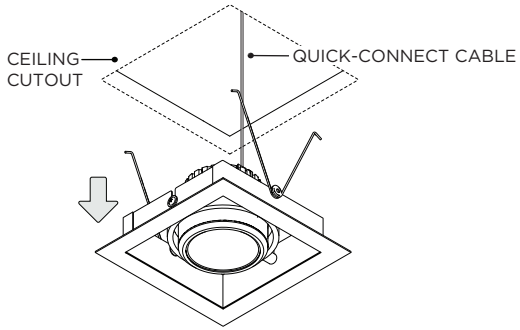

REMOVE LED ASSEMBLY FROM CEILING

2

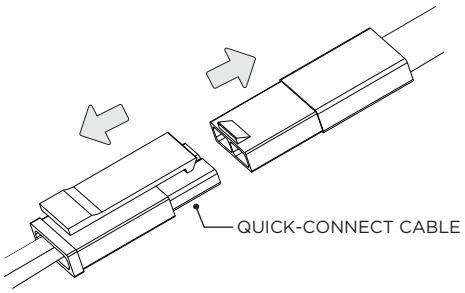

DISCONNECT QUICK-CONNECT CABLE FROM LED ASSEMBLY

3

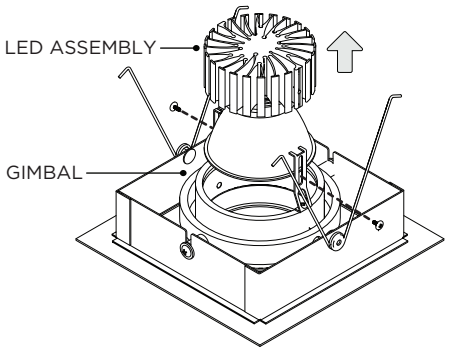

4

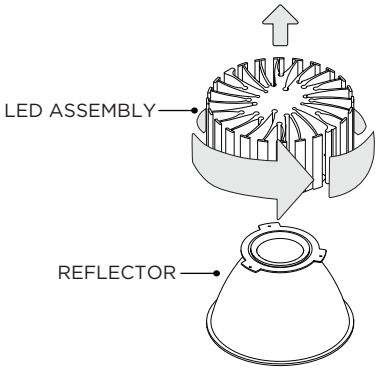

ⓘ THE IMAGES SHOWN ARE FOR ILLUSTRATION PURPOSES ONLY AND MAY NOT BE AN EXACT REPRESENTATION OF THE PRODUCT

OPTIONS

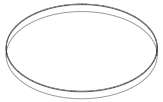

SOFTENING/LINEAR SPREAD LENS

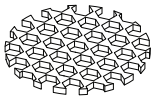

BLACK HEXCELL LOUVER

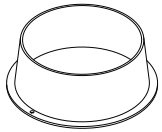

SNOOT

ⓘ INSTALLATION PROCESS IS IDENTICAL FOR M7, M5 & M3 GIMBALS

1

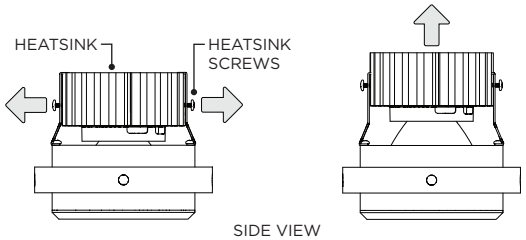

LOOSEN HEATSINK SCREWS AND RAISE HEATSINK TO ALLOW FOR OPTICAL ACCESSORY CLEARANCE

2

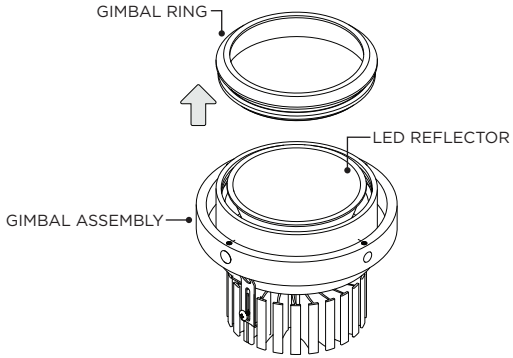

TWIST OFF GIMBAL RING FROM GIMBAL ASSEMBLY

3

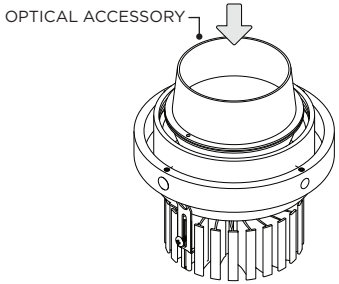

PLACE OPTICAL ACCESSORY ON TOP OF LED REFLECTOR

4

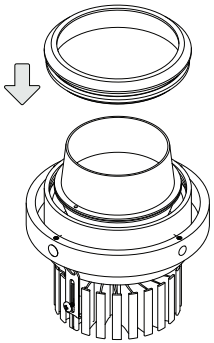

TWIST ON GIMBAL RING TO LOCK IN PLACE

5

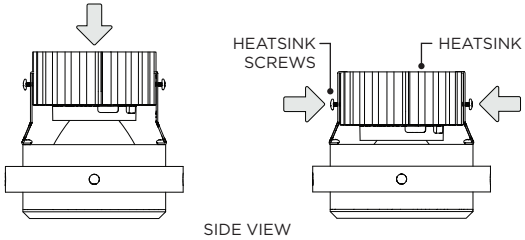

LOWER HEATSINK AND TIGHTEN HEATSINK SCREWS